FRAXION®4 INTERNATIONAL

FIXED

Versatile, high-performance, and retrofittable downlights, in a precise, 4-inch profile, the most diminutive in the industry.

PROJECT NAME:	TYPE:

ORDERING INFORMATION - DOWNLIGHT FITTING

SHAPE	TRIM	RATING	FLANGE FINISH	BAFFLE FINISH	LUMEN PACKAGE	CCT	OPTIC	INSTALL TYPE	CEILING THICKNESS	DRIVER	EFFECTS DEVICE
		-		-			-	EX	1	-	
F4R Round	FFS Standard Flange MFS Microflange TFS Trimless	1 IP20 Dry/Damp 2 IP64 Wet* *(Requires provided suction cup to service or aim & focus)	WH White BK Black PR Primer AU Cashmere Gold AG Satin Silver BB Burnt Bronze 00 Trimless* * (Required for trimless) CF Custom Finish* * (Consult Factory)	WH White BK Black PR Primer AU Cashmere Gold AG Satin Silver BB Burnt Bronze CF Custom Finish* * (Consult Factory)	**LOW FLUX STATIC WHITE** 80C12A 80+ CRI, Delivered Lumens - 872 80C16A 80+ CRI, Delivered Lumens - 1191 80C23A 80+ CRI, Delivered Lumens - 1642 90C10A 90+ CRI, Delivered Lumens - 721 90C14A 90+ CRI, Delivered Lumens - 984 90C19A 90+ CRI, Delivered Lumens - 1357 97C10A 97+ CRI, Delivered Lumens - 657 97C12A 97+ CRI, Delivered Lumens - 897 97C17A 97+ CRI, Delivered Lumens - 1238	22 2200K* * (Only available with 90+ CRI) 27 2700K 30 3000K 35 3500K 40 4000K	10 10°* * (Only available with 80C12A, 90C10A and 97C10A. Not available with 2200K) 15 15° 25 25° 40 40° 60 60° 85 85°* * (Requires -14WDL effects device)	EX Export	1 7mm-32mm	**UNIVERSAL (120-277V)** AN3 eldoLED, ECOdrive 1.0% 0-10V, LOG LN1 eldoLED, ECOdrive 1.0% 0-10V, LIN EA1 eldoLED, SOLOdrive 0.1% 0-10V, LOG LA1 eldoLED, SOLOdrive 0.1% 0-10V, LIN ED1 eldoLED, SOLOdrive 0.1% DALI, LOG LD1 eldoLED, SOLOdrive 0.1% DALI, LIN EX1 eldoLED, POWERdrive 0.1% DMX, LOG	**STANDARD EFFECTS DEVICE** 04 Soft Focus Lens NL No Lens * *(Standard with 10° optic. Not available for IP64 Wet Location, or Warm Dim) **ALTERNATE EFFECTS DEVICE** 02 Honeycomb Louver w/ Diffusion Film* *(Not available for IP64 Wet locations, or Warm Dim) 03 Clear Glass Lens* *(Not available for Warm Dim) 05 Frosted Glass Lens 08 Frosted Soft Focus Lens 14 Wide Distribution Lens* *(Required and only available for 85° beam spread) 26 Frosted Linear Spread Lens
F4S Square	FFS Standard Flange MFS Microflange TFS Trimless FFT Standard Flange Transitional Baffle MFT Microflange Transitional Baffle TFT Trimless Transitional Baffle				**HIGH FLUX STATIC WHITE** 80C30B 80+ CRI, Delivered Lumens -2507 90C26B 90+ CRI, Delivered Lumens - 2071 97C23B 97+ CRI, Delivered Lumens - 1889	27 2700K 30 3000K 35 3500K* * (Not available for 97+ CRI) 40 4000K	15 15° 25 25° 40 40° 60 60° 85 85°* * (Requires -14WDL effects device)				
					WARM DIM 90W11A 90+ CRI, Delivered Lumens -795 Incandescent Profile	WL 2700K - 1800K	25 25° 40 40° 60 60° 85 85°* * (Requires -14WDL effects device)				
					90W13A 90+ CRI, Delivered Lumens - 837 Halogen Profile *SEE PAGE 3 FOR DETAILED WARM DIM PROFILE COMPARISON.	WD 3200K - 1800K					
					TUNABLE WHITE 90T10B 90+ CRI, Delivered Lumens - 672 90T14B 90+ CRI, Delivered Lumens - 917 *ALL DELIVERED LUMEN OUTPUTS REFLECT 3000K PAIRED WITH 40° OPTIC AND SOFT FOCUS LENS.	TW 5000K - 2700K	15 15° 25 25° 40 40° 60 60° 85 85°* * (Requires -14WDL effects device)			**TUNABLE WHITE POWER SUPPLIES (120-277V)** DD1 eldoLED, DUALdrive 0.1% DALI, LOG	

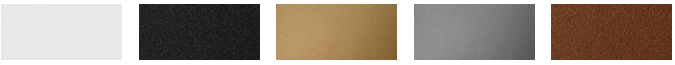

(WH) White Powder Coat | (BK) Black Powder Coat | (AU) Cashmere Gold Powder Coat | (AG) Satin Silver Powder Coat | (BB) Burnt Bronze Powder Coat

PART NUMBER NOTES

- Fitting ships as e.g., F4RFFS1-WHWH-90C10A2-3E1-AN3
- Driver ships with fitting

©2022 Lucifer® Lighting Company
As part of its policy of continuous research and product development, the company reserves the right to change or withdraw specifications without prior notice.

[PH] +1-210-227-7329
[FAX] +1-210-227-4967

ACCESSORIES

ROUND ALTERNATE EFFECTS DEVICES

IP20 Dry / Damp location only.
IP64 Wet location requires alternate baffle.

- ☐ **HCL-F4R** Honeycomb Louver w/ Diffusion Film*
  *(Not available for Warm Dim or IP64 Wet locations)
- ☐ **CGL-F4R** Clear Glass Lens*
  *(Not available for Warm Dim)
- ☐ **FGL-F4R** Frosted Glass Lens
- ☐ **SFL-F4R** Soft Focus Lens
- ☐ **FSFL-F4R** Frosted Soft Focus Lens
- ☐ **WDL-F4R** Wide Distribution Lens*
  *(Required and only available for 85° beam spread)
- ☐ **FLSL-F4R** Frosted Linear Spread Lens

SQUARE ALTERNATE EFFECTS DEVICES

IP20 Dry / Damp location only.
IP64 Wet location requires alternate baffle.

- ☐ **HCL-F4R** Honeycomb Louver w/ Diffusion Film*
  *(Not available for Warm Dim or IP64 Wet locations)
- ☐ **CGL-F4S** Clear Glass Lens*
  *(Not available for Warm Dim)
- ☐ **FGL-F4S** Frosted Glass Lens
- ☐ **SFL-F4S** Soft Focus Lens
- ☐ **FSFL-F4S** Frosted Soft Focus Lens
- ☐ **WDL-F4S** Wide Distribution Lens*
  *(Required and only available for 85° beam spread)
- ☐ **FLSL-F4S** Frosted Linear Spread Lens

REPLACEMENT BAFFLE ASSEMBLY (INCLUDES EFFECTS DEVICE)

ASSEMBLY	SHAPE	FITTING	RATING	FLANGE FINISH		EFFECTS DEVICE
RBA -			-		- 1 -	
REPLACEMENT BAFFLE ASSEMBLY	F4R Round	FFS Standard Flange MFS Microflange TFS Trimless	1 IP20 Dry/Damp 2 IP64 Wet* *(Requires provided suction cup to service or aim & focus)	WH White BK Black PR Primer AU Cashmere Gold AG Satin Silver BB Burnt Bronze CF Custom Finish* *(Consult Factory)		Leave blank for standard Soft Focus Lens HCL Honeycomb Louver w/ Diffusion Film* *(Not available for Warm Dim or IP64 Wet locations) CGL Clear Glass Lens* *(Not available for Warm Dim) FGL Frosted Glass Lens FSFL Frosted Soft Focus Lens WDL Wide Distribution Lens* *(Required and only available for 85°beam spread) FLSL Frosted Linear Spread Lens
	F4S Square	FFS Standard Flange MFS Microflange TFS Trimless FFT Standard Flange Transitional Baffle MFT Microflange Transitional Baffle TFT Trimless Transitional Baffle				

LOW FLUX AND WARM DIM REPLACEMENT OPTICS

Interchangeable optics accessible through fixture aperture.

- ☐ **RO-70-15-1** 15° optic*
  *(Not available for Warm Dim)
- ☐ **RO-70-25-1** 25° optic
- ☐ **RO-70-40-1** 40° optic
- ☐ **RO-70-60-1** 60° optic

HIGH FLUX AND TUNABLE WHITE REPLACEMENT OPTICS

Interchangeable optics accessible through fixture aperture.

- ☐ **RO-70-15-2** 15° optic
- ☐ **RO-70-25-2** 25° optic
- ☐ **RO-70-40-2** 40° optic
- ☐ **RO-70-60-2** 60° optic

REPLACEMENT SUCTION TOOL

One included with every six fixtures designated IP64 Wet location.

- ☐ **F4-TOOL-SUCTION** Allows for removal of baffle with IP64 Wet location

©2022 Lucifer® Lighting Company
As part of its policy of continuous research and product development, the company reserves the right to change or withdraw specifications without prior notice.
[PH] +1-210-227-7329
[FAX] +1-210-227-4967

FRAXION4 INTERNATIONAL FIXED

PERFORMANCE - 3000K - SOFT FOCUS LENS

LUMEN PACKAGE	WATTAGE	10° OPTIC NO SOFT FOCUS LENS		15° OPTIC SOFT FOCUS LENS		25° OPTIC SOFT FOCUS LENS		40° OPTIC SOFT FOCUS LENS		60° OPTIC SOFT FOCUS LENS		85° OPTIC WIDE DISTRIBUTION LENS	
		DELIVERED	LPW	DELIVERED	LPW	DELIVERED	LPW	DELIVERED	LPW	DELIVERED	LPW	DELIVERED	LPW
80C12A	10	946	66 (14W)	860	85	793	78	872	86	908	90	710	70
80C16A	14	-	-	1174	81	1083	77	1191	82	1241	86	969	67
80C23A	21	-	-	1620	76	1494	70	1642	77	1711	80	1337	62
80C30B	30	-	-	2472	82	2280	76	2507	84	2612	87	2041	68
90C10A	10	801	56 (14W)	711	70	656	65	721	71	751	74	587	58
90C14A	14	-	-	971	67	895	62	984	68	1025	71	801	55
90C19A	21	-	-	1338	62	1235	58	1357	63	1414	66	1105	52
90C26B	30	-	-	2043	68	1884	63	2071	69	2158	72	1686	56
97C10A	10	739	51 (14W)	648	64	598	59	657	65	685	68	535	53
97C12A	14	-	-	885	61	816	56	897	62	935	65	730	51
97C17A	21	-	-	1220	57	1126	53	1238	58	1289	60	1007	47
97C23B	30	-	-	1863	62	1719	57	1889	63	1969	66	1538	51
90W11A	14	-	-	-	-	804	57	795	57	828	59	646	46
90W13A	14	-	-	-	-	846	60	837	59	872	62	680	48
90T10B	14	-	-	697	49	661	47	672	48	670	47	523	37
90T14B	22	-	-	924	42	917	41	917	41	904	41	706	32

OUTPUT MULTIPLIER	
CCT	CCT SCALE
2200K	0.800
2700K	0.957
3000K	1.000
3500K	1.019
4000K	1.030

LIGHT LOSS FACTOR MULTIPLIER	
NO LENS	1.05
CGL	1.05
SFL	1.00
FGL	0.90
FSFL	0.87
FLSL	0.83
WDL	0.78

WARM DIM PERFORMANCE

WARM DIM TO MIRROR HALOGEN DIMMING PROFILE

90W13A 3200K - 1800K	Full on 100%	Dimmed to 80%	Dimmed to 70%	Dimmed to 50%	Dimmed to 20%	Dimmed to 10%	Dimmed to 2%
CCT (K)	3200	3150	3100	3000	2700	2200	1800
Light Output (Lm)	837	670	586	418	167	84	17
Power (W)	14	11	10	7	3	1.5	0.3
Efficacy (LPW)	59	59	59	59	59	59	59

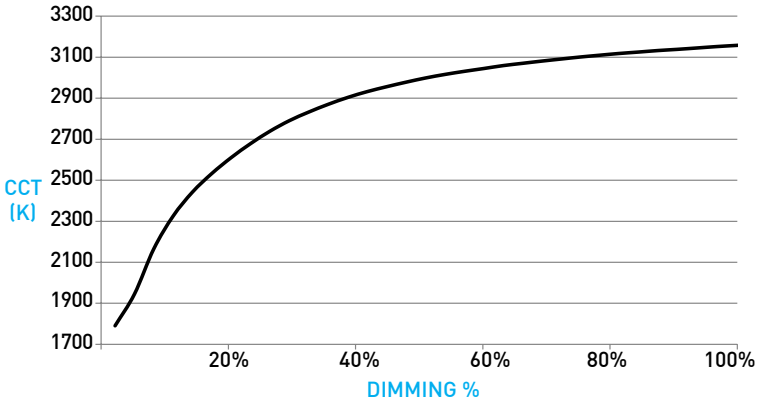

WARM DIM TO MIRROR INCANDESCENT DIMMING PROFILE

90W11A 2700K - 1800K	Full on 100%	Dimmed to 80%	Dimmed to 70%	Dimmed to 50%	Dimmed to 20%	Dimmed to 10%	Dimmed to 2%
CCT (K)	2700	2650	2620	2520	2180	1950	1800
Light Output (Lm)	795	636	556	397	159	79	16
Power (W)	14	11	10	7	3	1.5	0.5
Efficacy (LPW)	57	57	57	57	57	57	57

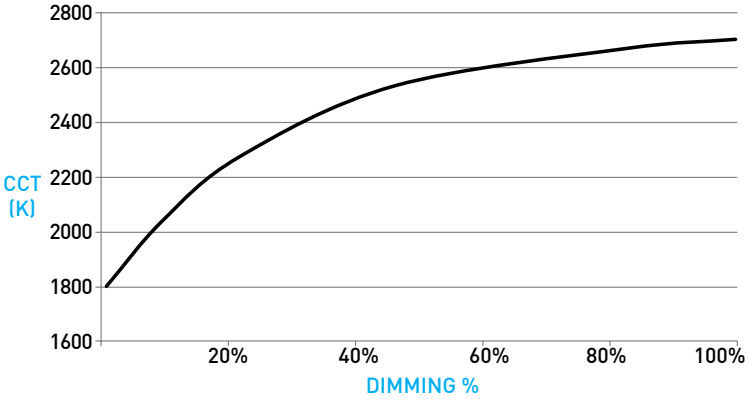

©2022 Lucifer® Lighting Company
As part of its policy of continuous research and product development, the company reserves the right to change or withdraw specifications without prior notice.

[PH] +1-210-227-7329
[FAX] +1-210-227-4967

FRAXION4 INTERNATIONAL FIXED

DOWNLIGHT FITTING

A BAFFLE

ROUND / SQUARE
Die-cast removable baffle features 72° cutoff. Minimizes aperture glare and conceals view into housing; includes silicone gasket.

TRANSITIONAL BAFFLE
Die-cast removable baffle transitions from square aperture at ceiling plane to round aperture at light source and features 72° cutoff. Minimizes aperture glare and conceals view into housing; includes silicone gasket.

B RETENTION
Integrated metal arm clamps located within fixture body allow discreet flange design, while accommodating varying ceiling thicknesses from 7mm to 32mm. Snap-on spacer clips (3X) supplied for ceiling thickness below 13mm only.

C1 STANDARD FLANGE PROFILE
Provides 22mm total contractor (goof) allowance with 13mm flange. Thickness measures 1.5mm. P64 Wet location features integral silicone gasket.

C2 MICROFLANGE PROFILE
Provides industry standard 11mm total contractor (goof) allowance with 7mm flange. Thickness measures 1.5mm. IP64 Wet location features integral silicone gasket.

C3 TRIMLESS PROFILE
Installs totally flush with the ceiling with no visible trim. Features integrated appliqué for plaster floating directly to the baffle. Not recommended for stucco applications.

DIMENSIONS / DRAWINGS

F4RFFS

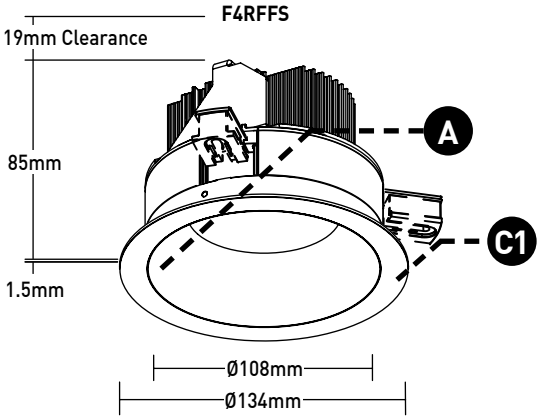

F4RMFS

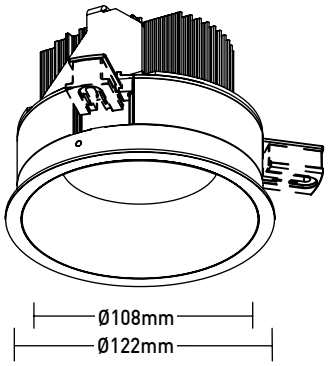

F4SFFS

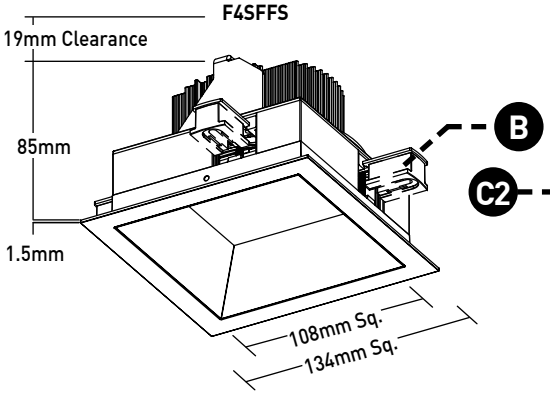

F4SMFS

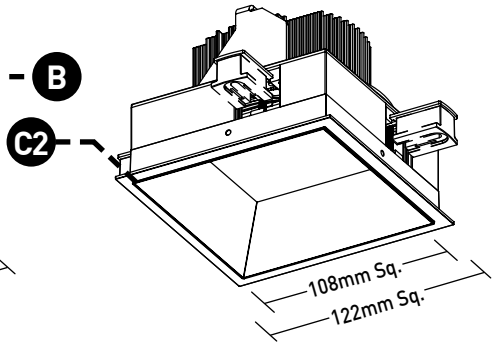

F4SFFT

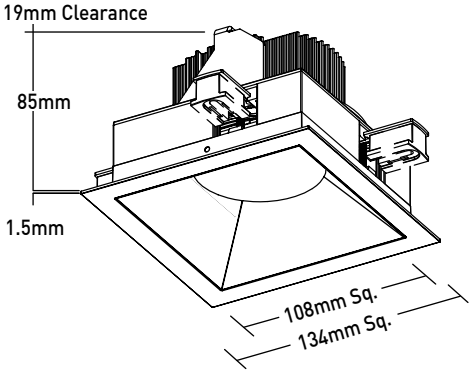

F4SMFT

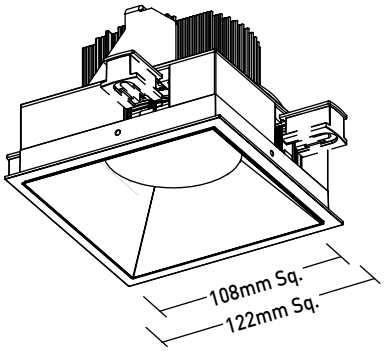

F4RTFS

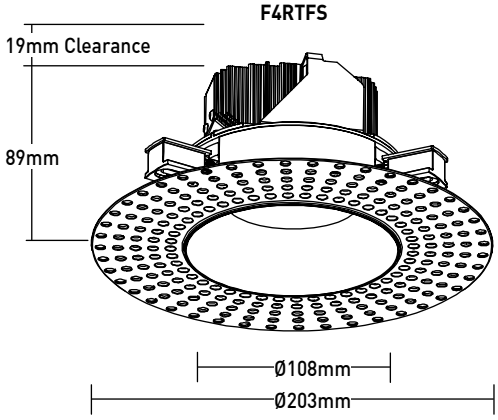

F4STFS

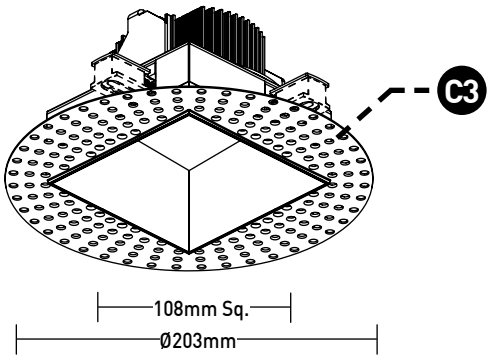

F4STFT

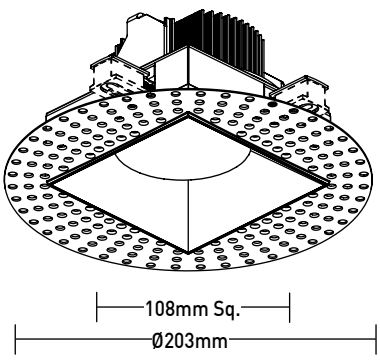

©2022 Lucifer® Lighting Company
As part of its policy of continuous research and product development, the company reserves the right to change or withdraw specifications without prior notice.

[PH] +1-210-227-7329
[FAX] +1-210-227-4967

FRAXION4 INTERNATIONAL FIXED

DOWNLIGHT FITTING

E OPTIC
Proprietary optic integrates Reflection, Refraction and TIR offering 10°, 15°, 25°, 40° & 60° beams.

F EFFECTS DEVICES
Soft focus lens included and sealed in IP64 Wet location option. Fixture is limited to 1 lens. Suction tool provided for removal of IP64 Wet location baffles.

CLEARANCE / POWER SUPPLY

G FITTING WITH NON-IC TETHERED POWER SUPPLY

- Requires 113mm diameter cutout.
- Tethered power supply protected wiring and quick-connect plug between fitting and power supply.
- Minimum 19mm clearance from top of fitting.
- Minimum setback from combustible and non-combustible materials of 168mm radius from fitting centerline; minimum 76mm from surfaces of power supply if not situated within above noted radius from fitting centerline.
- Minimum additional 76mm setback from insulation material with max R-Value 30 from any surface of downlight fitting assembly.
- Minimum additional 152mm setback from polycell spray foam insulation with max R-Value 60 from any surface of downlight fitting assembly.
- Consult factory for spacing requirements for any installations exceeding R-Value 60.
- Do not install in environments where ambient temperatures exceed 40°C (104°F).

DIMENSIONS / DRAWINGS

SECTION VIEW

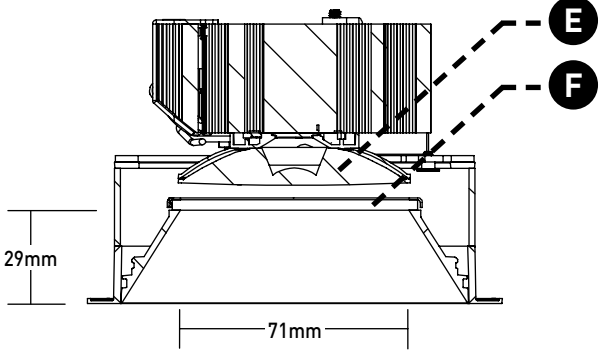

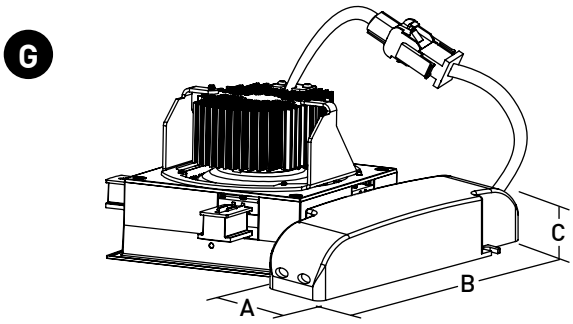

POWER SUPPLY DIMENSIONS			
Model	A	B	C
AN3	41mm	210mm	34mm
LN1			
EA1			
LA1			
ED1			
LD1			
EX1	76mm	152mm	30mm
DD1	76mm	130mm	30mm

©2022 Lucifer® Lighting Company
As part of its policy of continuous research and product development, the company reserves the right to change or withdraw specifications without prior notice.

[PH] +1-210-227-7329
[FAX] +1-210-227-4967

TECHNICAL

CONSTRUCTION
Downlight Fitting: Aluminum and steel. Extruded aluminum heat-sink. Painted finishes are granulated powder coat.
Housing: 22 Gauge galvanized steel.
Remote Power Supply: 22 Gauge galvanized steel.
Appliqué: Zinc Alloy

STATIC WHITE LED
2-step MacAdam ellipse LED module available in 80+, 90+ and 97+ CRI configurations in color temperatures of 2200K, 2700K, 3000K, 3500K and 4000K. Average rated lamp life: 50,000 hours. LED and driver assemblies are field-replaceable.

WARM DIM LED
3-step MacAdam ellipse warm dim LED module available in 90+ CRI configuration. 3200K or 2700K at full brightness, warming to 1800K at full dim. Average rated lamp life of 50,000 hours. LED and driver assemblies are field-replaceable.

TUNABLE WHITE LED
5-step MacAdam ellipse tunable white LED module available in 90+ CRI configuration. Features tuning range of 2700K to 5000K. Average rated lamp life: 50,000 hours. LED and driver assemblies are field-replaceable.

POWER SUPPLY PERFORMANCE AND DIMMING INFORMATION

	0-10V				DALI			DMX
Power Supply	AN3	LN1	EA1	LA1	ED1	LD1	DD1	EX1
Minimum °C	-20 °C	-20 °C	-20 °C	-20 °C	-20 °C	-20 °C	-20 °C	-20 °C
Maximum °C	40 °C	40 °C	40 °C	40 °C	40 °C	40 °C	40 °C	40 °C
Dimming %	1.0%	1.0%	0.1%	0.1%	0.1%	0.1%	0.1%	0.1%

Note: For EA1 and LA1 drivers consult chart on page 7 to confirm appropriate dimming curve for compatibility with selected control.

LISTING
CE listed for IP20 Dry / Damp and IP64 Wet locations.
U.S. Patent: 10,344,958

WARRANTY
Manufacturer's 1-year warranty guarantees product(s) listed to be free from defects in material and workmanship under normal use and service. 5-year warranty on LED and power supply to operate with 70% of the original flux and remain within a range of 3 duv. 10-year Lutron Advantage limited warranty available on Lutron equipped systems. Warranty period begins from the date of shipment by Seller and conditional upon the use of manufacturer-supplied power supply. Consult website for full warranty terms and conditions.

CHANGE LOG
1. 03/15/2021: UPDATED HIGH FLUX STATIC WHITE PHOTOMETRICS.
2. 03/15/2021: REMOVED HIGH FLUX 97+ CRI 3500K OFFERING.
3. 01/12/2021: ADDED 2200K, 2700K-1800K WARM DIM AND 10 DEGREE OPTIC OFFERINGS.
4. 04/03/2020: ADDED ADJUSTABLE HCL ASSEMBLY AND EX1 DRIVER.
5. 03/10/2020: ADDED TRIMLESS TO FLANGE FINISH OPTIONS.

©2022 Lucifer® Lighting Company
As part of its policy of continuous research and product development, the company reserves the right to change or withdraw specifications without prior notice.
[PH] +1-210-227-7329
[FAX] +1-210-227-4967

DIMMING COMPATIBILITY

eldoLED DRIVER COMPATIBILITY

Power supply **EA1 / LA1** **Dimmer / Switch Control Manufacturer**	**Family/Model #**
Busch-Jaeger	2112U-101
Jung	240-10
Leviton Lighting Controls	IP710-DLX
Lightolier Controls	ZP600FAM120
Lutron Electronics	Nova T® - NTFTV
Lutron Electronics	Diva® - DVTV
Lutron Electronics	Nova® - NFTV
Merten	5729
Pass & Seymour	CD4FB-W
The Watt Stopper	DCLV1
Sensor Switch	nIO EZ
Synergy	ISD BC
Power supply **EA1 / LA1** **Lighting Control System Manufacturer**	**Family/Model #**
Lutron Electronics	GrafixEye® GRX-TVI w GRX3503
Lutron Electronics	Energy Savr Node™ - QSN-4T16-S
Lutron Electronics	TVM2 Module
Crestron®	GLX-DIMFLV8
Crestron®	GLXP-DIMFLV8
Crestron®	GLPAC-DIMFLV4-*
Crestron®	GLPAC-DIMFLV8-*
Crestron®	GLPP-DIMFLVEX-PM
Crestron®	GLPP-1DIMFLV2EX-PM
Crestron®	GLPP-1DIMFLV3EX-PM
Crestron®	DIN-AO8
Crestron®	DIN-4DIMFLV4
Crestron®	CLS-EXP-DIMFLV
Crestron®	CLCI-1DIMFLV2EX
ABB	SD/S 2.16.1

©2022 Lucifer® Lighting Company
As part of its policy of continuous research and product development, the company reserves the right to change or withdraw specifications without prior notice.
[PH] +1-210-227-7329
[FAX] +1-210-227-4967