FRAXION®4 INTERNATIONAL

WALLWASH

PROJECT NAME:	TYPE:

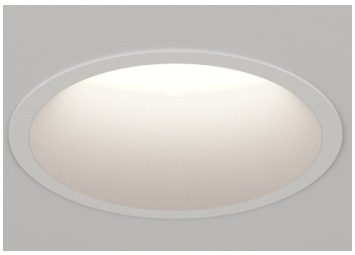

Versatile, high-performance, and retrofittable downlights, in a precise, 4-inch profile, the most diminutive in the industry.

ORDERING INFORMATION - DOWNLIGHT FITTING

SHAPE	TRIM	RATING
F4R Round	FWW Standard Flange MWW Microflange TWW Trimless	1 Dry/Damp 2 Wet* * (Requires provided suction cup to service or aim & focus)
F4S Square	FWW Standard Flange MWW Microflange TWW Trimless	

FLANGE FINISH	BAFFLE FINISH
WH White BK Black PR Primer AU Cashmere Gold AG Satin Silver BB Burnt Bronze 00 Trimless* * (Required for trimless) CF Custom Finish* * (Consult Factory)	WH White BK Black PR Primer AU Cashmere Gold AG Satin Silver BB Burnt Bronze CF Custom Finish* * (Consult Factory)

LUMEN PACKAGE	CCT
LOW FLUX STATIC WHITE 80C12A 80+ CRI, Delivered Lumens - 599 80C16A 80+ CRI, Delivered Lumens - 819 80C23A 80+ CRI, Delivered Lumens - 1129 90C10A 90+ CRI, Delivered Lumens - 495 90C14A 90+ CRI, Delivered Lumens - 677 90C19A 90+ CRI, Delivered Lumens - 933 97C10A 97+ CRI, Delivered Lumens - 452 97C12A 97+ CRI, Delivered Lumens - 617 97C17A 97+ CRI, Delivered Lumens - 851	22 2200K* * (Only available with 90+ CRI) 27 2700K 30 3000K 35 3500K 40 4000K
HIGH FLUX STATIC WHITE 80C30B 80+ CRI, Delivered Lumens - 1724 90C26B 90+ CRI, Delivered Lumens - 1424 97C23B 97+ CRI, Delivered Lumens - 1298	27 2700K 30 3000K 35 3500K* * (Not available for 97+ CRI) 40 4000K
WARM DIM 90W11A 90+ CRI, Delivered Lumens - 625 Incandescent Profile	WL 2700K - 1800K
90W13A 90+ CRI, Delivered Lumens - 658 Halogen Profile *SEE PAGE 3 FOR DETAILED WARM DIM PROFILE COMPARISON.	WD 3200K - 1800K
TUNABLE WHITE 90T10B 90+ CRI, Delivered Lumens - 590 90T14B 90+ CRI, Delivered Lumens - 807 *ALL DELIVERED LUMEN OUTPUTS REFLECT 3000K PAIRED WITH SOFT FOCUS LENS.	TW 5000K - 2700K

OPTIC	INSTALL TYPE	CEILING THICKNESS
WW	EX	1
WW Wallwash Optic	EX Export	1 7mm - 32mm

DRIVER
UNIVERSAL (120-277V) AN3 eldoLED, ECOdrive 1.0% 0-10V, LOG LN1 eldoLED, ECOdrive 1.0% 0-10V, LIN EA1 eldoLED, SOLOdrive 0.1% 0-10V, LOG LA1 eldoLED, SOLOdrive 0.1% 0-10V, LIN ED1 eldoLED, SOLOdrive 0.1% DALI, LOG LD1 eldoLED, SOLOdrive 0.1% DALI, LIN EX1 eldoLED, POWERdrive 0.1% DMX, LOG
TUNABLE WHITE POWER SUPPLIES (120-277V) DD1 eldoLED, DUALdrive 0.1% DALI, LOG

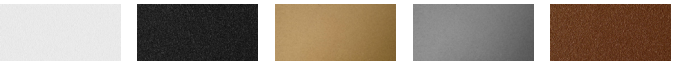

(WH) White Powder Coat | (BK) Black Powder Coat | (AU) Cashmere Gold Powder Coat | (AG) Satin Silver Powder Coat | (BB) Burnt Bronze Powder Coat

PART NUMBER NOTES

- Fitting ships as e.g., F4SMWW1-WHWH-90C10A2-5E1-AN3
- Driver ships with fitting

©2022 Lucifer® Lighting Company
As part of its policy of continuous research and product development, the company reserves the right to change or withdraw specifications without prior notice.

[PH] +1-210-227-7329
[FAX] +1-210-227-4967

ACCESSORIES

REPLACEMENT BAFFLE ASSEMBLY (INCLUDES EFFECTS DEVICE)

ASSEMBLY	SHAPE	FITTING	RATING	FLANGE FINISH	
RBA -			-	-	1
REPLACEMENT BAFFLE ASSEMBLY	F4R Round	FWW Standard Flange MWW Microflange TWW Trimless	1 IP20 Dry/Damp 2 IP64 Wet	WH White BK Black PR Primer AU Cashmere Gold AG Satin Silver BB Burnt Bronze CF Custom Finish* *(Consult Factory)	
	F4S Square	FWW Standard Flange MWW Microflange TWW Trimless			

LOW FLUX AND WARM DIM REPLACEMENT OPTIC
Interchangeable optics accessible through fixture aperture.
☐ **RO-70-WW-1** Wallwash optic

HIGH FLUX AND TUNABLE WHITE REPLACEMENT OPTIC
Interchangeable optics accessible through fixture aperture.
☐ **RO-70-WW-2** Wallwash optic

©2022 Lucifer® Lighting Company
As part of its policy of continuous research and product development, the company reserves the right to change or withdraw specifications without prior notice.
[PH] +1-210-227-7329
[FAX] +1-210-227-4967

FRAXION4 INTERNATIONAL WALLWASH

PERFORMANCE - 3000K

LUMEN PACKAGE	WATTAGE	WALLWASH OPTIC	
		DELIVERED	LPW
80C12A	10	599	59
80C16A	17	819	57
80C23A	21	1129	53
80C30B	30	1724	57
90C10A	10	495	49
90C14A	17	677	47
90C19A	21	933	44
90C26B	30	1424	47
97C10A	10	452	45
97C12A	17	617	43
97C17A	21	851	40
97C23B	30	1298	43
90W11A	14	625	45
90W13A	14	658	47
90T10B	14	590	42
90T14B	22	807	36

OUTPUT MULTIPLIER	
CCT	CCT SCALE
2200K	0.800
2700K	0.957
3000K	1.000
3500K	1.019
4000K	1.030

WARM DIM PERFORMANCE

WARM DIM TO MIRROR HALOGEN DIMMING PROFILE

90W13A 3200K - 1800K	Full on 100%	Dimmed to 80%	Dimmed to 70%	Dimmed to 50%	Dimmed to 20%	Dimmed to 10%	Dimmed to 2%
CCT (K)	3200	3150	3100	3000	2700	2200	1800
Light Output (Lm)	658	526	461	329	132	65	13
Power (W)	14	11	10	7	3	1.5	0.3
Efficacy (LPW)	47	47	47	47	47	47	47

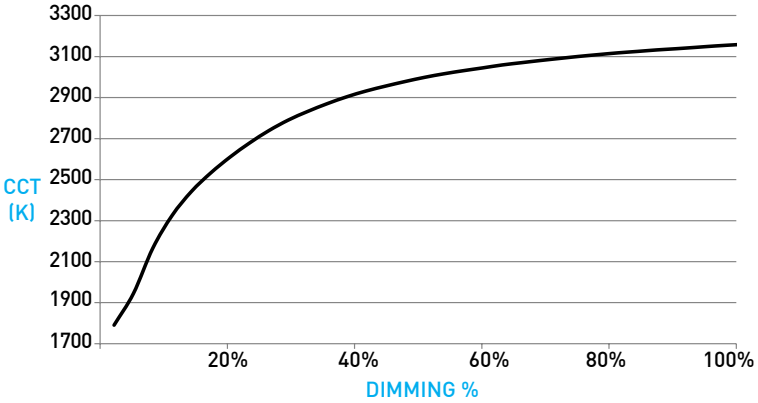

WARM DIM TO MIRROR INCANDESCENT DIMMING PROFILE

90W11A 2700K - 1800K	Full on 100%	Dimmed to 80%	Dimmed to 70%	Dimmed to 50%	Dimmed to 20%	Dimmed to 10%	Dimmed to 2%
CCT (K)	2700	2650	2620	2520	2180	1950	1800
Light Output (Lm)	625	500	437	312	125	62	12
Power (W)	14	11	10	7	3	1.5	0.5
Efficacy (LPW)	45	45	45	45	45	45	45

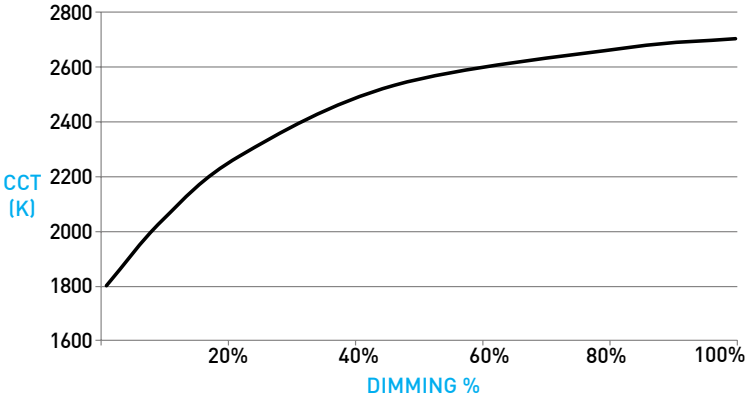

©2022 Lucifer® Lighting Company
As part of its policy of continuous research and product development, the company reserves the right to change or withdraw specifications without prior notice.

[PH] +1-210-227-7329
[FAX] +1-210-227-4967

FRAXION4 INTERNATIONAL WALLWASH

DOWNLIGHT FITTING

A BAFFLE

ROUND / SQUARE
Die-cast removable baffle minimizes aperture glare and conceals view into housing; includes silicone gasket.

TRANSITIONAL BAFFLE
Die-cast removable baffle transitions from square aperture at ceiling plane to round aperture at light source. Minimizes aperture glare and conceals view into housing; includes silicone gasket.

B RETENTION
Integrated metal arm clamps located within fixture body allow discreet flange design, while accommodating varying ceiling thicknesses from 7mm to 32mm. Snap-on spacer clips (3X) supplied for ceiling thickness below 13mm only.

C1 STANDARD FLANGE PROFILE
Provides 22mm total contractor (goof) allowance with 13mm flange. Thickness measures 1.5mm. IP64 Wet location features integral silicone gasket.

C2 MICROFLANGE PROFILE
Provides industry standard 11mm total contractor (goof) allowance with 7mm flange. Thickness measures 1.5mm. IP64 Wet location features integral silicone gasket.

C3 TRIMLESS PROFILE
Installs totally flush with the ceiling with no visible trim. Features integrated appliqué for plaster floating directly to the baffle. Not recommended for stucco applications.

DIMENSIONS / DRAWINGS

F4RFWW

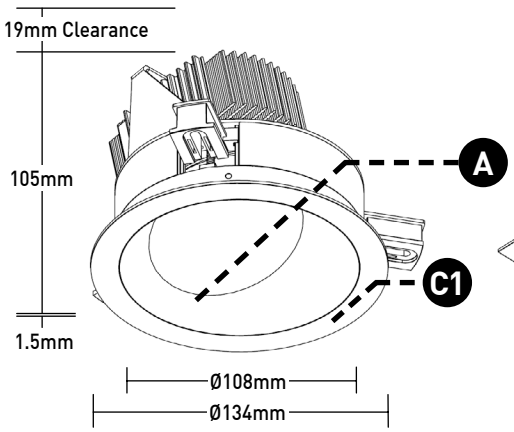

F4SFWW

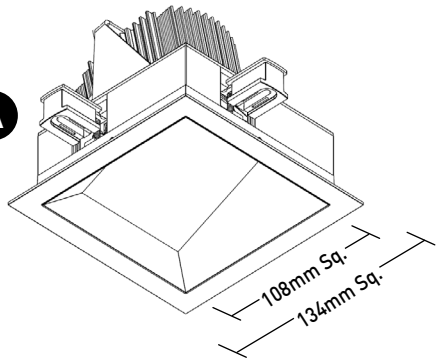

F4RMWW

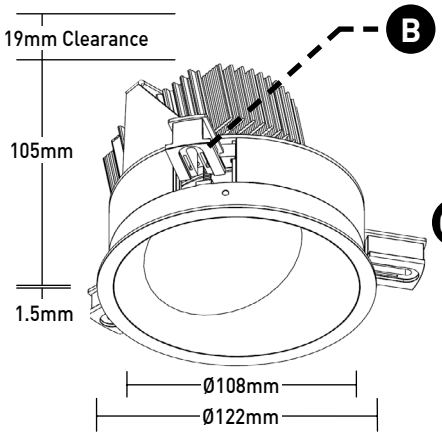

F4SMWW

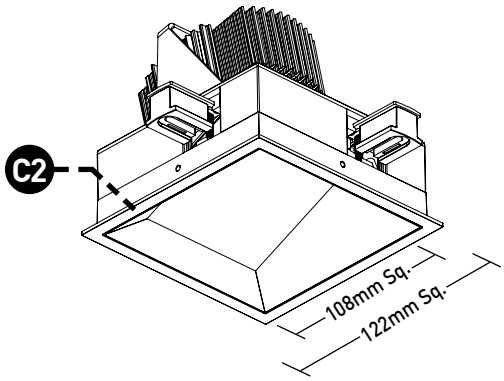

F4RTWW

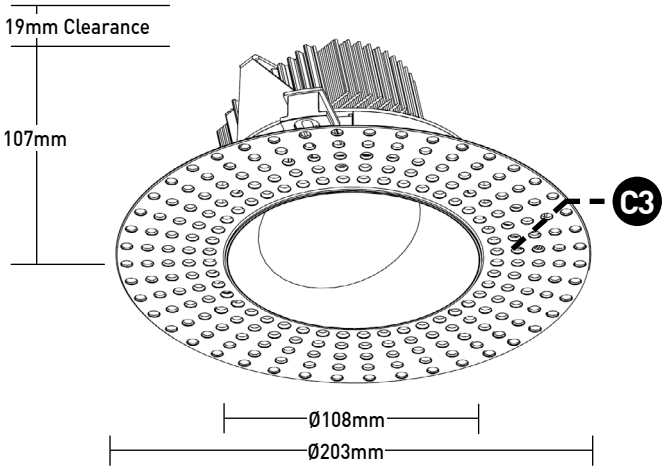

F4SWW

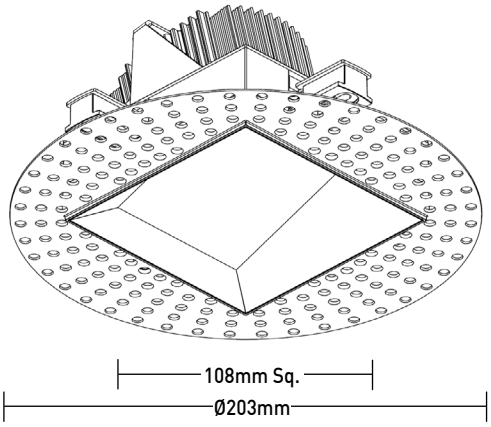

©2022 Lucifer® Lighting Company
As part of its policy of continuous research and product development, the company reserves the right to change or withdraw specifications without prior notice.

[PH] +1-210-227-7329
[FAX] +1-210-227-4967

FRAXION4 INTERNATIONAL WALLWASH

DOWNLIGHT FITTING

E OPTIC
Proprietary wallwash optic design integrates Reflection, Refraction and TIR principles.

F EFFECTS DEVICES
Soft focus lens included and sealed in IP64 Wet location option. Fixture is limited to 1 lens. Suction tool provided for removal of IP64 Wet location baffles.

CLEARANCE / POWER SUPPLY

G FITTING WITH NON-IC TETHERED POWER SUPPLY

- Requires 113mm diameter cutout.
- Tethered power supply protected wiring and quick-connect plug between fitting and power supply.
- Minimum 19mm clearance from top of fitting.
- Minimum setback from combustible and non-combustible materials of 168mm radius from fitting centerline; minimum 76mm from surfaces of power supply if not situated within above noted radius from fitting centerline.
- Minimum additional 76mm setback from insulation material with max R-Value 30 from any surface of downlight fitting assembly.
- Minimum additional 152mm setback from polycell spray foam insulation with max R-Value 60 from any surface of downlight fitting assembly.
- Consult factory for spacing requirements for any installations exceeding R-Value 60.
- Do not install in environments where ambient temperatures exceed 40°C (104°F).

DIMENSIONS / DRAWINGS

SECTION VIEW

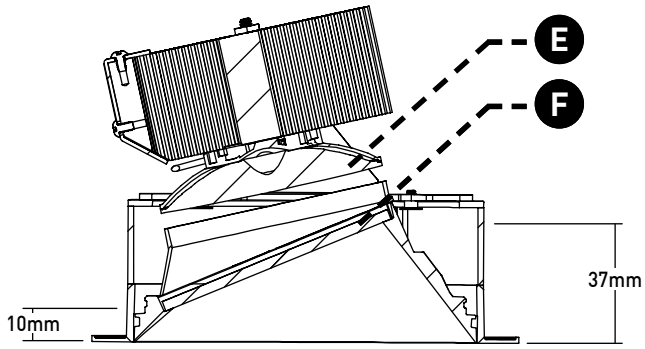

G

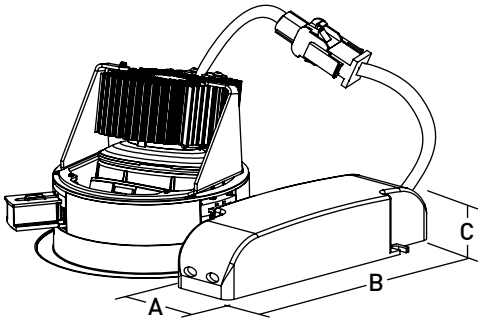

POWER SUPPLY DIMENSIONS			
Model	A	B	C
AN3	41mm	210mm	34mm
LN1			
EA1			
LA1			
ED1			
LD1			
EX1	76mm	152mm	30mm
DD1	76mm	130mm	30mm

©2022 Lucifer® Lighting Company
As part of its policy of continuous research and product development, the company reserves the right to change or withdraw specifications without prior notice.

[PH] +1-210-227-7329
[FAX] +1-210-227-4967

FRAXION4 INTERNATIONAL WALLWASH

TECHNICAL

CONSTRUCTION
Downlight Fitting: Aluminum and steel. Extruded aluminum heat-sink. Painted finishes are granulated powder coat.
Housing: 22 Gauge galvanized steel.
Remote Power Supply: 22 Gauge galvanized steel.
Appliqué: Zinc Alloy

STATIC WHITE LED
2-step MacAdam ellipse LED module available in 80+, 90+ and 97+ CRI configurations in color temperatures of 2200K, 2700K, 3000K, 3500K and 4000K. Average rated lamp life: 50,000 hours. LED and driver assemblies are field-replaceable.

WARM DIM LED
Proprietary 3-step MacAdam ellipse warm dim LED module available in 90+ CRI configuration. 3200K at full brightness, warming to 1800K at full dim. Average rated lamp life of 50,000 hours. LED and driver assemblies are field-replaceable.

TUNABLE WHITE LED
5-step MacAdam ellipse tunable white LED module available in 90+ CRI configuration. Features tuning range of 2700K to 5000K. Average rated lamp life: 50,000 hours. LED and driver assemblies are field-replaceable.

POWER SUPPLY PERFORMANCE AND DIMMING INFORMATION

	0-10V				DALI			DMX
Power Supply	AN3	LN1	EA1	LA1	ED1	LD1	DD1	EX1
Minimum °C	-20 °C	-20 °C	-20 °C	-20 °C	-20 °C	-20 °C	-20 °C	-20 °C
Maximum °C	40 °C	40 °C	40 °C	40 °C	40 °C	40 °C	40 °C	40 °C
Dimming %	1.0%	1.0%	0.1%	0.1%	0.1%	0.1%	0.1%	0.1%

Note: For EA1 and LA1 drivers consult chart on page 7 to confirm appropriate dimming curve for compatibility with selected control.

SPACING
Recommended fixture spacing is 36" (914mm) on center with 36" (914mm) setback from wall plane.

LISTING
CE listed for IP20 Dry / Damp and IP64 Wet locations.
U.S. Patent: 10,344,958

WARRANTY
Manufacturer's 1-year warranty guarantees product(s) listed to be free from defects in material and workmanship under normal use and service. 5-year warranty on LED and power supply to operate with 70% of the original flux and remain within a range of 3 duv. 10-year Lutron Advantage limited warranty available on Lutron equipped systems. Warranty period begins from the date of shipment by Seller and conditional upon the use of manufacturer-supplied power supply. Consult website for full warranty terms and conditions.

CHANGE LOG
1. 03/15/2021: UPDATED HIGH FLUX STATIC WHITE PHOTOMETRICS.
2. 03/15/2021: REMOVED HIGH FLUX 97+ CRI 3500K OFFERING.
3. 01/12/2021: ADDED 2200K AND 2700K-1800K WARM DIM OFFERINGS.
4. 04/03/2020: ADDED EX1 DRIVER.
5. 03/10/2020: ADDED TRIMLESS TO FLANGE FINISH OPTIONS.

©2022 Lucifer® Lighting Company
As part of its policy of continuous research and product development, the company reserves the right to change or withdraw specifications without prior notice.
[PH] +1-210-227-7329
[FAX] +1-210-227-4967

DIMMING COMPATIBILITY

eldoLED DRIVER COMPATIBILITY

Power supply **EA1 / LA1** **Dimmer / Switch Control Manufacturer**	**Family/Model #**
Busch-Jaeger	2112U-101
Jung	240-10
Leviton Lighting Controls	IP710-DLX
Lightolier Controls	ZP600FAM120
Lutron Electronics	Nova T® - NTFTV
Lutron Electronics	Diva® - DVTV
Lutron Electronics	Nova® - NFTV
Merten	5729
Pass & Seymour	CD4FB-W
The Watt Stopper	DCLV1
Sensor Switch	nIO EZ
Synergy	ISD BC
Power supply **EA1 / LA1** **Lighting Control System Manufacturer**	**Family/Model #**
Lutron Electronics	GrafixEye® GRX-TVI w GRX3503
Lutron Electronics	Energy Savr Node™ - QSN-4T16-S
Lutron Electronics	TVM2 Module
Crestron®	GLX-DIMFLV8
Crestron®	GLXP-DIMFLV8
Crestron®	GLPAC-DIMFLV4-*
Crestron®	GLPAC-DIMFLV8-*
Crestron®	GLPP-DIMFLVEX-PM
Crestron®	GLPP-1DIMFLV2EX-PM
Crestron®	GLPP-1DIMFLV3EX-PM
Crestron®	DIN-AO8
Crestron®	DIN-4DIMFLV4
Crestron®	CLS-EXP-DIMFLV
Crestron®	CLCI-1DIMFLV2EX
ABB	SD/S 2.16.1

©2022 Lucifer® Lighting Company
As part of its policy of continuous research and product development, the company reserves the right to change or withdraw specifications without prior notice.
[PH] +1-210-227-7329
[FAX] +1-210-227-4967