FRAXION®4

FIXED

PROJECT NAME:	TYPE:

Versatile, high-performance, and retrofittable downlights, in a precise, 4-inch profile, the most diminutive in the industry.

ORDERING INFORMATION - DOWNLIGHT / HOUSING

Quick Ship Product. All rough in components ship within 10 days up to quantities of 100.

JA8-2019 INDICATED BY SHADING

SHAPE

- **F4R** Round
- **F4S** Square

TRIM

- **FFS** Standard Flange
- **MFS** Microflange
- **TFS** Trimless
- **FFT** Standard Flange Transitional Baffle
- **MFT** Microflange Transitional Baffle
- **TFT** Trimless Transitional Baffle

RATING

- **1** Dry/Damp
- **2** Wet*
  - * (Requires provided suction cup to service or aim & focus)

FLANGE FINISH

- **WH** White
- **BK** Black
- **PR** Primer
- **AU** Cashmere Gold
- **AG** Satin Silver
- **BB** Burnt Bronze
- **00** Trimless*
  - * (Required for trimless)
- **CF** Custom Finish*
  - * (Consult Factory)

BAFFLE FINISH

- **WH** White
- **BK** Black
- **PR** Primer
- **AU** Cashmere Gold
- **AG** Satin Silver
- **BB** Burnt Bronze
- **CF** Custom Finish*
  - * (Consult Factory)

LUMEN PACKAGE

LOW FLUX STATIC WHITE

- **80C12A** 80+ CRI, Delivered Lumens - 872
- **80C16A** 80+ CRI, Delivered Lumens - 1191
- **80C23A** 80+ CRI, Delivered Lumens - 1642
- **90C10A** 90+ CRI, Delivered Lumens - 721
- **90C14A** 90+ CRI, Delivered Lumens - 984
- **90C19A** 90+ CRI, Delivered Lumens - 1357
- **97C10A** 97+ CRI, Delivered Lumens - 657
- **97C12A** 97+ CRI, Delivered Lumens - 897
- **97C17A** 97+ CRI, Delivered Lumens - 1238

HIGH FLUX STATIC WHITE

- **80C30B** 80+ CRI, Delivered Lumens -2507*
  - *(Not available for IC housing applications)
- **90C26B** 90+ CRI, Delivered Lumens - 2071*
  - *(Not available for IC housing applications)
- **97C23B** 97+ CRI, Delivered Lumens - 1889*
  - *(Not available for IC housing applications)

WARM DIM

- **90W11A** 90+ CRI, Delivered Lumens -795 Incandescent Profile
- **90W13A** 90+ CRI, Delivered Lumens - 837 Halogen Profile

*SEE PAGE 3 FOR DETAILED WARM DIM PROFILE COMPARISON.

TUNABLE WHITE

- **90T10B** 90+ CRI, Delivered Lumens - 672*
  - *(Not available for Remodel applications)
- **90T14B** 90+ CRI, Delivered Lumens - 917*
  - *(Not available for Remodel applications)

*ALL DELIVERED LUMEN OUTPUTS AND T24 COMPLIANCE REFLECT 3000K PAIRED WITH 40° OPTIC AND SOFT FOCUS LENS. REFERENCE PAGE 3 FOR ADDITIONAL T24 COMPLIANT CONFIGURATIONS.

CCT

- **22** 2200K*
  - * (Only available with 90+ CRI)
- **27** 2700K
- **30** 3000K
- **35** 3500K
- **40** 4000K

- **27** 2700K
- **30** 3000K
- **35** 3500K*
  - * (Not available for 97+ CRI)
- **40** 4000K

- **WL** 2700K - 1800K
- **WD** 3200K - 1800K

- **TW** 5000K - 2700K

OPTIC

- **10** 10°*
  - * (Only available with 80C12A, 90C10A and 97C10A. Not available with 2200K)
- **15** 15°
- **25** 25°
- **40** 40°
- **60** 60°
- **85** 85°*
  - * (Requires -14 WDL effects device)

- **15** 15°
- **25** 25°
- **40** 40°
- **60** 60°
- **85** 85°*
  - * (Requires -14 WDL effects device)

- **25** 25°
- **40** 40°
- **60** 60°
- **85** 85°*
  - * (Requires -14 WDL effects device)

- **15** 15°
- **25** 25°
- **40** 40°
- **60** 60°
- **85** 85°*
  - * (Requires -14 WDL effects device)

INSTALL TYPE

HOUSING INTEGRAL DRIVER

- **IC** IC
- **NC** NIC
- **AT** IC, Airtight*
  - *(Chicago Plenum, Airtight & Title 24 compliant housing)

HOUSING REMOTE DRIVER

- **IR** IC, Remote
- **NR** NIC, Remote
- **AR** IC, Airtight, Remote*
  - *(Chicago Plenum, Airtight & Title 24 compliant housing)

REMODEL

- **RM** Remodel
- **RR** Remote, Remodel

CEILING THICKNESS

- **1** 0.125" - 1.25"*
  - *(Housing)
  - 0.25" - 1.25"*
    - *(Remodel)
  - 0.50" - 1.25"*
    - *(All Trimless)
- **T** 0.125" - 1.25"*
  - *(Includes adjustable housing height bracket)

DRIVER

DOMESTIC (120V)

- **TR2** Philips, 2% Leading/ Trailing/Triac*
  - * (Not available for 80C12A, 90C10A, or 97C10A unless 10° degree optic is specified. Not available for 80C30B, 90C26B, or 97C23B)
- **L23** Lutron, Hi-Lume 1% 2-Wire

UNIVERSAL (120-277V)

- **LH1** Lutron, Hi-Lume 1% Ecosystem
- **AN4** Philips Xitanium 1% 0-10V, LOG
- **LN2** Philips Xitanium 1% 0-10V, LIN
- **EA2** eldoLED, SOLOdrive 0.1% 0-10V, LOG
- **LA2** eldoLED, SOLOdrive 0.1% 0-10V, LIN
- **ED1** eldoLED, SOLOdrive 0.1% DALI, LOG
- **LD1** eldoLED, SOLOdrive 0.1% DALI, LIN

TUNABLE WHITE POWER SUPPLIES (120-277V)

- **DD1** eldoLED, DUALdrive 0.1% DALI, LOG
- **DG1** eldoLED, DUALdrive 0.1% 0-10V, LOG
- **DL1** eldoLED, DUALdrive 0.1% 0-10V, LIN

EFFECTS DEVICE

STANDARD EFFECTS DEVICE

- **04** Soft Focus Lens
- **NL** No Lens *
  - *(Standard with 10° optic. Not available for Wet Location, or Airtight Housings)

ALTERNATE EFFECTS DEVICE

- **02** Honeycomb Louver w/ Diffusion Film*
  - *(Not available for Wet location, Warm Dim, or Airtight Housings)
- **03** Clear Glass Lens*
  - *(Not available for Warm Dim)
- **05** Frosted Glass Lens
- **08** Frosted Soft Focus Lens
- **14** Wide Distribution Lens*
  - *(Required and only available for 85° beam spread)
- **26** Frosted Linear Spread Lens

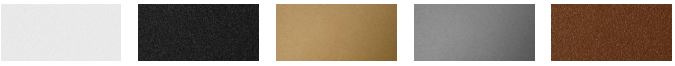

- (WH) White Powder Coat
- (BK) Black Powder Coat
- (AU) Cashmere Gold Powder Coat
- (AG) Satin Silver Powder Coat
- (BB) Burnt Bronze Powder Coat

PART NUMBER NOTES

- Trim ships as e.g., F4RFFS1-WHWH-90C10A2-3I1-AN4
- Housing ships as e.g., ICT-F4R-01
- Driver ships with trim
- Remote driver ships with trim as e.g., PSF4-RMT-90C-10A-1L23

©2022 Lucifer® Lighting Company

As part of its policy of continuous research and product development, the company reserves the right to change or withdraw specifications without prior notice.

[PH] +1-210-227-7329

[FAX] +1-210-227-4967

[DATE OF REV: 01172022]

ACCESSORIES

ROUND ALTERNATE EFFECTS DEVICES
Dry/Damp location only.
Wet location requires alternate baffle.

- ☐ **HCL-F4R** Honeycomb Louver w/ Diffusion Film*
  *(Not available for Warm Dim, or Airtight housings)
- ☐ **CGL-F4R** Clear Glass Lens*
  *(Not available for Warm Dim)
- ☐ **FGL-F4R** Frosted Glass Lens
- ☐ **SFL-F4R** Soft Focus Lens
- ☐ **FSFL-F4R** Frosted Soft Focus Lens
- ☐ **WDL-F4R** Wide Distribution Lens*
  *(Required and only available for 85° beam spread)
- ☐ **FLSL-F4R** Frosted Linear Spread Lens

SQUARE ALTERNATE EFFECTS DEVICES
Dry/Damp location only.
Wet location requires alternate baffle.

- ☐ **HCL-F4S** Honeycomb Louver w/ Diffusion Film*
  *(Not available for Warm Dim, or Airtight housings)
- ☐ **CGL-F4S** Clear Glass Lens*
  *(Not available for Warm Dim)
- ☐ **FGL-F4S** Frosted Glass Lens
- ☐ **SFL-F4S** Soft Focus Lens
- ☐ **FSFL-F4S** Frosted Soft Focus Lens
- ☐ **WDL-F4S** Wide Distribution Lens*
  *(Required and only available for 85° beam spread)
- ☐ **FLSL-F4S** Frosted Linear Spread Lens

REPLACEMENT BAFFLE ASSEMBLY (INCLUDES EFFECTS DEVICE)

ASSEMBLY	SHAPE	TRIM	RATING	FLANGE FINISH		EFFECTS DEVICE
RBA -			-		- 1 -	
REPLACEMENT BAFFLE ASSEMBLY	F4R Round	FFS Standard Flange MFS Microflange TFS Trimless	1 Dry / Damp 2 Wet* *(Requires provided suction cup to service or aim & focus)	WH White BK Black PR Primer AU Cashmere Gold AG Satin Silver BB Burnt Bronze CF Custom Finish* *(Consult Factory)		Leave blank for standard Soft Focus Lens HCL Honeycomb Louver w/ Diffusion Film* *(Not available for Wet location, Warm Dim, or Airtight housings) CGL Clear Glass Lens* *(Not available for Warm Dim) FGL Frosted Glass Lens FSFL Frosted Soft Focus Lens WDL Wide Distribution Lens* *(Required and only available for 85°beam spread) FLSL Frosted Linear Spread Lens
	F4S Square	FFS Standard Flange MFS Microflange TFS Trimless FFT Standard Flange Transitional Baffle MFT Microflange Transitional Baffle TFT Trimless Transitional Baffle				

LOW FLUX AND WARM DIM REPLACEMENT OPTICS
Interchangeable optics accessible through fixture aperture.

- ☐ **RO-70-15-1** 15° optic*
  *(Not available for Warm Dim)
- ☐ **RO-70-25-1** 25° optic
- ☐ **RO-70-40-1** 40° optic
- ☐ **RO-70-60-1** 60° optic

HIGH FLUX AND TUNABLE WHITE REPLACEMENT OPTICS
Interchangeable optics accessible through fixture aperture.

- ☐ **RO-70-15-2** 15° optic
- ☐ **RO-70-25-2** 25° optic
- ☐ **RO-70-40-2** 40° optic
- ☐ **RO-70-60-2** 60° optic

REPLACEMENT SUCTION TOOL
One included with every six fixtures designated Wet location.

- ☐ **F4-TOOL-SUCTION** Allows for removal of baffle with Wet location

T-GRID ACCESSORY KIT
Supplied with ceiling thickness "T" and recommended for installations in T-Grid and furring channel up to 1.5" tall. Available for ceiling thicknesses from 0.50" - 1.00".

- ☐ **DHA-TG-KIT**

HANGER BAR EXTENDER KIT
Extends hanger bars from 24.0" to 46.0" maximum.

- ☐ **FRX-HBE-46** Extender, Hanger Bar

EMERGENCY LIGHTING - REMOTE MOUNT ONLY
During disruption of main power, emergency battery inverter provides temporary 120V or 277V to fixture.

- ☐ **EMB-S-20/25-120/277-LEDX** 20/25 watt max capacity, 120 or 277 VAC 60Hz, Non-Dimmable
- ☐ **EMB-S-100-120-LEDX** 100 watt max capacity, 120 VAC 60Hz, Dimmable
- ☐ **EMB-S-100-277-LEDX** 100 watt max capacity, 277 VAC 60Hz, Dimmable
- ☐ **EMB-S-250-120/277-LEDX** 250 watt max capacity, 120 or 277 VAC 60Hz, Dimmable

©2022 Lucifer® Lighting Company
As part of its policy of continuous research and product development, the company reserves the right to change or withdraw specifications without prior notice.
[PH] +1-210-227-7329
[FAX] +1-210-227-4967

FRAXION4 FIXED

PERFORMANCE - 3000K

LUMEN PACKAGE	WATTAGE	10° OPTIC NO SOFT FOCUS LENS		15° OPTIC SOFT FOCUS LENS		25° OPTIC SOFT FOCUS LENS		40° OPTIC SOFT FOCUS LENS		60° OPTIC SOFT FOCUS LENS		85° OPTIC WIDE DISTRIBUTION LENS	
		DELIVERED	LPW	DELIVERED	LPW	DELIVERED	LPW	DELIVERED	LPW	DELIVERED	LPW	DELIVERED	LPW
80C12A	10	946	66 (14W)	860	85	793	78	872	86	908	90	710	70
80C16A	14	-	-	1174	81	1083	77	1191	82	1241	86	969	67
80C23A	21	-	-	1620	76	1494	70	1642	77	1711	80	1337	62
80C30B	30	-	-	2472	82	2280	76	2507	84	2612	87	2041	68
90C10A	10	801	56 (14W)	711	70	656	65	721	71	751	74	587	58
90C14A	14	-	-	971	67	895	62	984	68	1025	71	801	55
90C19A	21	-	-	1338	62	1235	58	1357	63	1414	66	1105	52
90C26B	30	-	-	2043	68	1884	63	2071	69	2158	72	1686	56
97C10A	10	739	51 (14W)	648	64	598	59	657	65	685	68	535	53
97C12A	14	-	-	885	61	816	56	897	62	935	65	730	51
97C17A	21	-	-	1220	57	1126	53	1238	58	1289	60	1007	47
97C23B	30	-	-	1863	62	1719	57	1889	63	1969	66	1538	51
90W11A	14	-	-	-	-	804	57	795	57	828	59	646	46
90W13A	14	-	-	-	-	846	60	837	59	872	62	680	48
90T10B	14	-	-	697	49	661	47	672	48	670	47	523	37
90T14B	22	-	-	924	42	917	41	917	41	904	41	706	32

OUTPUT MULTIPLIER	
CCT	CCT SCALE
2200K (Consult factory for JA8 details)	0.800
2700K	0.957
3000K	1.000
3500K	1.019
4000K	1.030

LIGHT LOSS FACTOR MULTIPLIER	
NO LENS	1.05
CGL	1.05
SFL	1.00
FGL	0.90
FSFL	0.87
FLSL	0.83
WDL	0.78
HCL	0.65

JA8-2019 INDICATED BY SHADING

WARM DIM PERFORMANCE

WARM DIM TO MIRROR HALOGEN DIMMING PROFILE

90W13A 3200K - 1800K	Full on 100%	Dimmed to 80%	Dimmed to 70%	Dimmed to 50%	Dimmed to 20%	Dimmed to 10%	Dimmed to 2%
CCT (K)	3200	3150	3100	3000	2700	2200	1800
Light Output (Lm)	837	670	586	418	167	84	17
Power (W)	14	11	10	7	3	1.5	0.3
Efficacy (LPW)	59	59	59	59	59	59	59

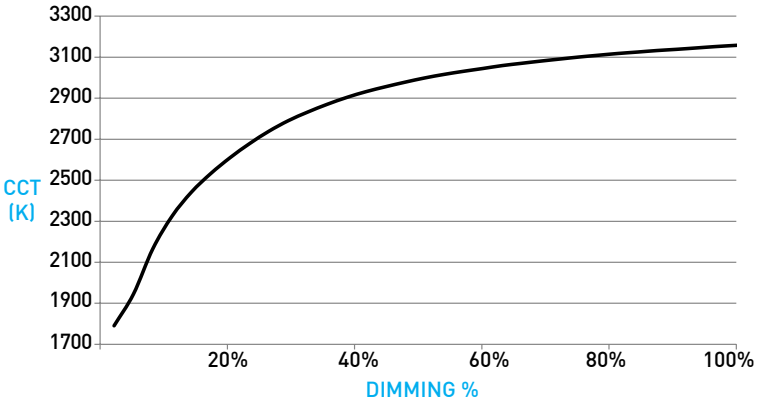

WARM DIM TO MIRROR INCANDESCENT DIMMING PROFILE

90W11A 2700K - 1800K	Full on 100%	Dimmed to 80%	Dimmed to 70%	Dimmed to 50%	Dimmed to 20%	Dimmed to 10%	Dimmed to 2%
CCT (K)	2700	2650	2620	2520	2180	1950	1800
Light Output (Lm)	795	636	556	397	159	79	16
Power (W)	14	11	10	7	3	1.5	0.5
Efficacy (LPW)	57	57	57	57	57	57	57

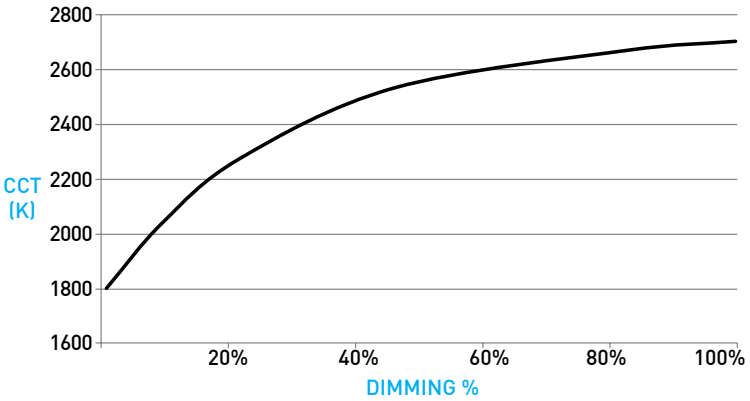

©2022 Lucifer® Lighting Company
As part of its policy of continuous research and product development, the company reserves the right to change or withdraw specifications without prior notice.

[PH] +1-210-227-7329
[FAX] +1-210-227-4967

FRAXION4 FIXED

DOWNLIGHT

A BAFFLE

ROUND / SQUARE
Die-cast removable baffle features 72° cutoff. Minimizes aperture glare and conceals view into housing; includes silicone gasket.

TRANSITIONAL BAFFLE
Die-cast removable baffle transitions from square aperture at ceiling plane to round aperture at light source and features 72° cutoff. Minimizes aperture glare and conceals view into housing; includes silicone gasket.

B RETENTION

Integrated metal arm clamps located within fixture body allow discreet flange design, while accommodating varying ceiling thicknesses from 0.125" to 1.25". Snap-on spacer clips (3X) supplied for ceiling thickness below 0.50" only.

C1 STANDARD FLANGE PROFILE

Provides 0.86" total contractor (goof) allowance with 0.50" flange. Thickness measures 0.06". Wet location features integral silicone gasket.

C2 MICROFLANGE PROFILE

Provides industry standard 0.42" total contractor (goof) allowance with 0.28" flange. Thickness measures 0.06". Wet location features integral silicone gasket.

C3 TRIMLESS PROFILE

Installs totally flush with the ceiling with no visible trim. Features integrated appliqué for plaster floating directly to the baffle, thickness measures 0.15" including 0.06" plaster stop. Not recommended for stucco applications.

DIMENSIONS / DRAWINGS

F4RFFS

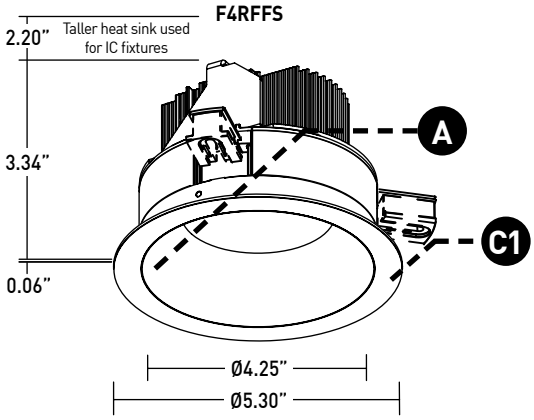

F4RMFS

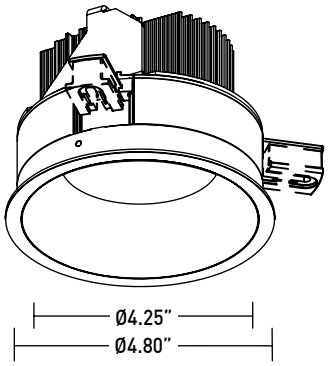

F4SFFS

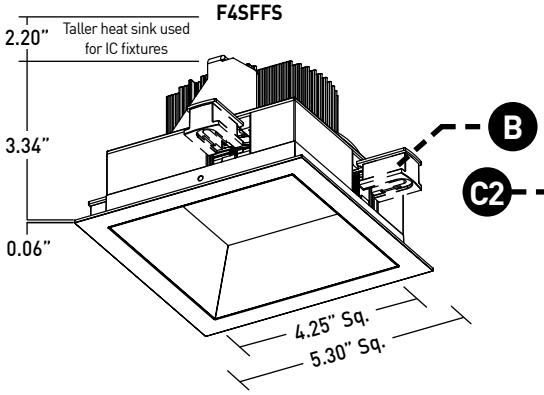

F4SMFS

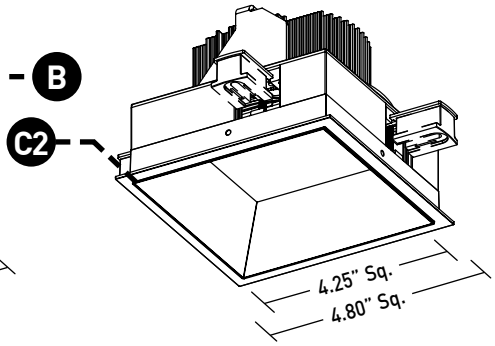

F4SFFT

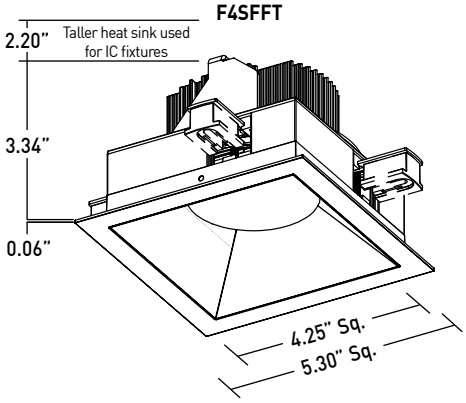

F4SMFT

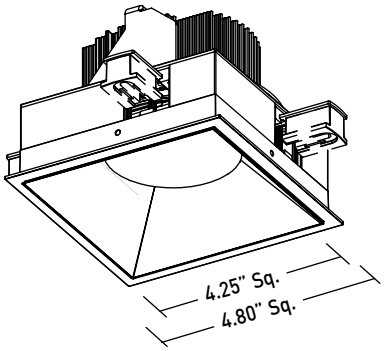

F4RTFS

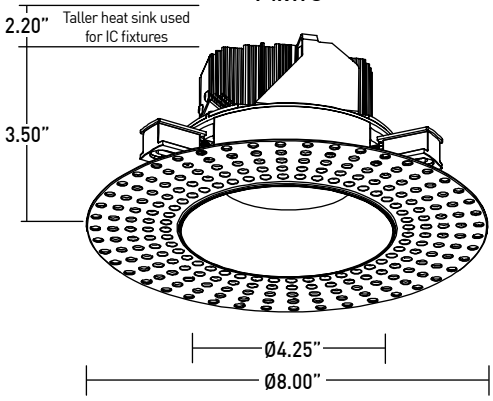

F4STFS

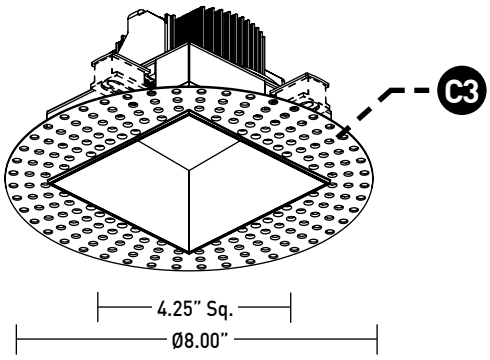

F4STFT

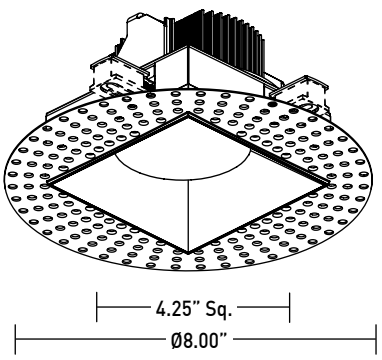

©2022 Lucifer® Lighting Company
As part of its policy of continuous research and product development, the company reserves the right to change or withdraw specifications without prior notice.

[PH] +1-210-227-7329
[FAX] +1-210-227-4967

FRAXION4 FIXED

DOWNLIGHT

D OPTIC
Proprietary optic integrates Reflection, Refraction and TIR offering 10°, 15°, 25°, 40° & 60° beams.

E EFFECTS DEVICES
Soft focus lens included and sealed in Wet location option. Fixture is limited to 1 lens. Suction tool provided for removal of Wet location baffles.

HOUSING / MOUNTING

F ICT (IC) HOUSING - TALL
- For IC ceilings.
- Chicago Plenum, Airtight and Title 24 (JA8) listed.
- Accommodates max 1711 delivered lumens.
- No setback from polycell spray foam insulation having max R-Value of 60 on all sides and top of housing.

G NCM (NIC) HOUSING - MEDIUM
- Minimum 0.50" setback from combustible and non-combustible materials on all sides and top of housing.
- Minimum 3.00" setback from insulation material having max R-Value 30 on all sides and top of housing.
- Minimum 6.00" setback from polycell spray foam insulation having max R-Value 60.

H HOUSING COLLAR
- Requires 4.625" cutout.
- Fixed round aperture or square aperture with 45 degree rotation that locks from below providing easy alignment of square aperture housings.
- Accommodates varying ceiling thicknesses.

I ADJUSTABLE HANGER BAR HEIGHT ACCESSORY
Provided with ceiling thickness "T" and recommended for installations in T-Grid and with furring channel. Hanger bars are installed to adjustable bracket. Allows housing to be raised and lowered; ceiling thickness remains 0.5" to 1.0" max.

HOUSING / MOUNTING NOTES

- Do not install in environments where ambient temperatures exceed 40°C (104°F).
- Power supply compartment and all splice connections may be serviced from room side.
- Consult factory for spacing requirements for any installations exceeding R-Value 60.
- Hanger bars fitted to short side of housing, and long side of Low Flux housings; extend from 14.0" to 24.0", but may be field cut to accommodate narrow stud spacing. Can be extended up to 46" maximum with FRX-HBE-46 kit.
- Hanger bars and brackets add 4.00" to the overall dimension, but are exclusive of the setback requirements.
- Driver assembly ships with trim, not housing. Housing and trim feature mating quick-connect plugs for ease of installation.

DIMENSIONS / DRAWINGS

SECTION VIEW

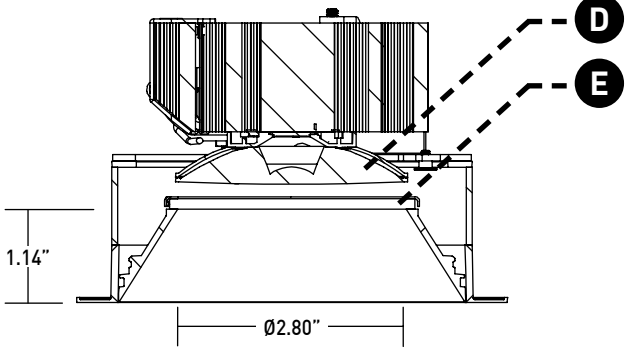

F / G

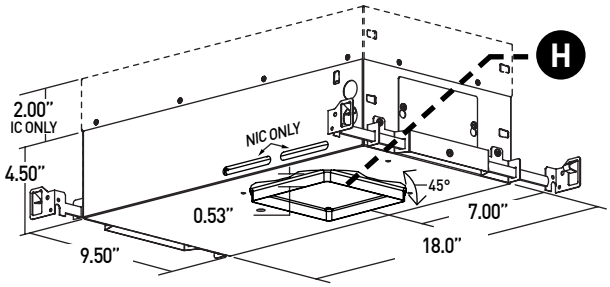

NOTE: Square housing shown, housing will feature round aperture for round fixtures.

I

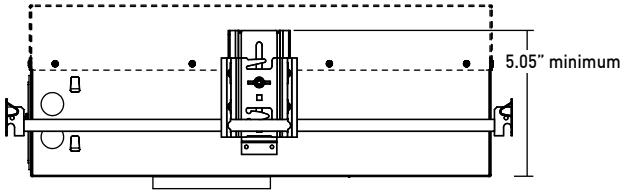

©2022 Lucifer® Lighting Company
As part of its policy of continuous research and product development, the company reserves the right to change or withdraw specifications without prior notice.

[PH] +1-210-227-7329
[FAX] +1-210-227-4967

REMOTE POWER SUPPLY

J Provided with install types "IR", "NR" and "AR". Remote power supply provides additional driver options. Consult installation guide for maximum allowable secondary run lengths between PSF4-RMT and fixture. Must be installed in an accessible location.

REMODEL POWER SUPPLY

K REMODEL WITH NON-IC TETHERED POWER SUPPLY

- Requires 4.42" cutout.
- Installs without conventional housing using integral mounting clamps.
- Tethered power supply / junction box with metal conduit protected wiring and quick-connect plug between fixture and power supply.
- Minimum 0.75" clearance from top of trim.
- Minimum setback from combustible and non-combustible materials of 6.63" radius from fixture centerline; minimum 3.00" from surfaces of power supply / junction box if not situated within above noted radius from fixture centerline.
- Minimum additional 3.00" setback from insulation material with max R-Value 30 from any surface of downlight fixture assembly.
- Minimum additional 6.00" setback from polycell spray foam insulation with max R-Value 60 from any surface of downlight fixture assembly.

L REMOTE APPLICATIONS

Remote power supply and PSF4-RMT-AK accessory kit provided with install type "RR".

REMODEL NOTES

- Do not install in environments where ambient temperatures exceed 40°C (104°F).
- Power supply compartment and all splice connections serviceable from room side.
- Consult factory for spacing requirements for any installations exceeding R-Value 60.

J

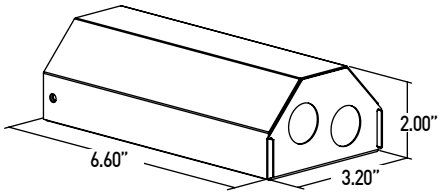

K

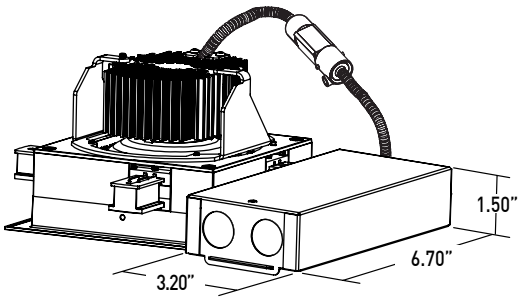

L

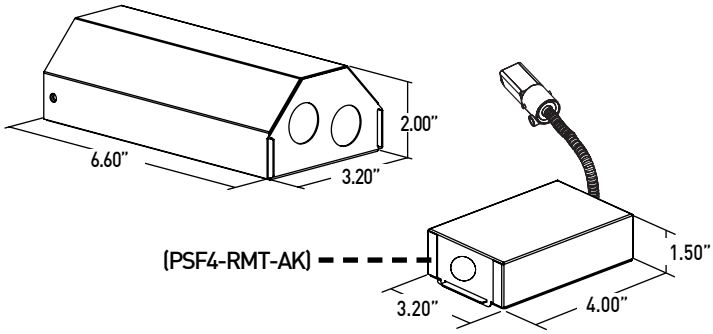

©2022 Lucifer® Lighting Company
As part of its policy of continuous research and product development, the company reserves the right to change or withdraw specifications without prior notice.
[PH] +1-210-227-7329
[FAX] +1-210-227-4967

[DATE OF REV: 01172022]

TECHNICAL

CONSTRUCTION
Downlight: Aluminum and steel. Extruded aluminum heat-sink. Painted finishes are granulated powder coat.
Housing: 22 Gauge galvanized steel.
Remote Power Supply: 22 Gauge galvanized steel.
Appliqué: Zinc Alloy

STATIC WHITE LED
2-step MacAdam ellipse LED module available in 80+, 90+ and 97+ CRI configurations in color temperatures of 2200K, 2700K, 3000K, 3500K and 4000K. Average rated lamp life of 50,000 hours. LED and driver assemblies are field-replaceable.

WARM DIM LED
3-step MacAdam ellipse warm dim LED module available in 90+ CRI configuration. 3200K or 2700K at full brightness, warming to 1800K at full dim. Average rated lamp life of 50,000 hours. LED and driver assemblies are field-replaceable.

TUNABLE WHITE LED
5-step MacAdam ellipse tunable white LED module available in 90+ CRI configuration. Features tuning range of 2700K to 5000K. Average rated lamp life of 50,000 hours. LED and driver assemblies are field-replaceable.

POWER SUPPLY PERFORMANCE AND DIMMING INFORMATION

	ELV		ECO	0-10V						DALI		
Power Supply	TR2	L23	LH1	AN4	LN2	EA2	LA2	DL1	DG1	ED1	LD1	DD1
Minimum °C	-20 °C	0 °C	0 °C	-20 °C	-20 °C	-20 °C	-20 °C	-20 °C	-20 °C	-20 °C	-20 °C	-20 °C
Maximum °C	40 °C	40 °C	40 °C	40 °C	40 °C	40 °C	40 °C	40 °C	40 °C	40 °C	40 °C	40 °C
Dimming %	2.0%	1.0%	1.0%	1.0%	1.0%	0.1%	0.1%	0.1%	0.1%	0.1%	0.1%	0.1%

Note: For TR2, L23, LH1, LP1, AN4, EA2 and LA2 drivers consult chart on page 8 to confirm appropriate dimming curve for compatibility with selected control.

MAXIMUM ALLOWABLE REMOTE DRIVER WIRING DISTANCES

	WIRE AWG				
DRIVER	12	14	16	18	20
TR2, AN4, LN2	285'	180'	113'	71'	45'
L23, LH1	60'	40'	25'	15'	-
EA2, LA2, ED1, LD1, DG1, DL1, DD1	-	-	118'	72	46'

LISTING
cTUVus listed to UL1598 standard for Dry / Damp and Wet locations.
Chicago Plenum, Airtight and Title 24 JA8-2019 Listed.
U.S. Patent: 10,344,958

WARRANTY
Manufacturer's 1-year warranty guarantees product(s) listed to be free from defects in material and workmanship under normal use and service. 5-year warranty on LED and power supply to operate with 70% of the original flux and remain within a range of 3 duv. 10-year Lutron Advantage limited warranty available on Lutron equipped systems. Warranty period begins from the date of shipment by Seller and conditional upon the use of manufacturer-supplied power supply. Consult website for full warranty terms and conditions.

CHANGE LOG
1. 01/12/2021: ADDED 2200K, 2700K-1800K WARM DIM AND 10 DEGREE OPTIC OFFERINGS.
2. 03/15/2021: UPDATED HIGH FLUX STATIC WHITE PHOTOMETRICS.
3. 03/15/2021: REMOVED HIGH FLUX 97+ CRI 3500K OFFERING.

©2022 Lucifer® Lighting Company
As part of its policy of continuous research and product development, the company reserves the right to change or withdraw specifications without prior notice.
[PH] +1-210-227-7329
[FAX] +1-210-227-4967

DIMMING COMPATIBILITY

PHILIPS DRIVER COMPATIBILITY

Power supply **TR2** **Manufacturer**	**Family/Model #**
Lutron Electronics	DV-600P
Lutron Electronics	DVELV-303P
Lutron Electronics	NTELV-600
Lutron Electronics	MAELV-600
Lutron Electronics	SELV-300P
Lutron Electronics	DVLV-600P
Lutron Electronics	NFTU-5A
Lutron Electronics	CTCL-153P
Lutron Electronics	GL-600H
Lutron Electronics	S-600P
Lutron Electronics	PHPM
Power supply **AN4** **Manufacturer**	**Family/Model #**
Lutron Electronics	DVTV plus PP-DV
Lutron Electronics	DVSCTV plus PP-DV
Lutron Electronics	DVSTV
Lutron Electronics	DVSCSTV
Lutron Electronics	QSGRJ-XP plus GRX-TVI
Lutron Electronics	QSGRJ-XE plus GRX-TVI
Lutron Electronics	QSGR-XE plus GRX-TVI
Lutron Electronics	NFTV plus PP-DV
Lutron Electronics	NTSTV
Lutron Electronics	RMJ-5T
Lutron Electronics	RMJS-8T
Lutron Electronics	FCJS-010
Leviton	IllumaTch IP7 series
Philips	Sunrise - SR1200ZTUNV

LUTRON DRIVER COMPATIBILITY

Power supply **L23** **Lutron Product Family**	**Part No.**
Maestro WirelessR 600 W dimmer	MRF2-6ND-120-
Maestro WirelessR 1000 W dimmer	MRF2-10ND-120-
Caséta® Wireless Pro 1000 W dimmer	PD-10NXD-
GRAFIK T™ CL® dimmer	GT-250M- GTJ-250M-
HomeWorks® QS adaptive dimmer	HQRD-6NA-
HomeWorks® QS 600 W dimmer	HQRD-6ND-
HomeWorks® QS 1000 W dimmer	HQRD-10ND-
RadioRA® 2 adaptive dimmer	RRD-6NA-
RadioRA® 2 1000 W dimmer	RRD-10ND
myRoom™ DIN power module	MQSE-4A1-D
HomeWorks® QS DIN power module	LQSE-4A1-D
HomeWorks® QS wallbox power module	HQRJ-WPM-6D-120
HomeWorks® wallbox power module	HWI-WPM-6D-120
GRAFIK Eye® QS control unit	QSGR-, QSGRJ-
GRAFIK Eye® 3000 control unit	GRX-3100- GRX-3500-
RPM-4U module (LCP, HomeWorks® QS, GRAFIK Systems™, Quantum®)	HW-RPM-4U-120 LP-RPM-4U-120
RPM-4A module (LCP, HomeWorks® QS, GRAFIK Systems™, Quantum®)	HW-RPM-4A-120, LP-RPM-4A-120
GP dimming panels	Various
Ariadni CL 250W dimmer	AYCL-253P-
Diva CL 250W dimmer	DVCL-253P- DCSCCL-253P-
Nova T CL 250W dimmer	NTCL-250-
Power supply **LH1 / LP1** **Lutron Product Family**	**Part No.**
PowPak Dimming Modules	RMJ-ECO32-DV-B
PowPak Dimming Modules	FCJ/FCJS-ECO
Energi Savr Nodes	QSN-1ECO-S
GRAFIK Eye QS control unit Homeworks QS control unit	QSN-2ECO-S
GRAFIK Eye QS control unit Homeworks QS control unit	QSGRJ-_E (wireless) QSGR-_E
Quantum Hub	QP2-_ _ 2C
Quantum Hub	QP2-_ _ 4C
Quantum Hub	QP2-_ _ 6C
Quantum Hub	QP2-_ _ 8C
Homeworks QS power module myRoom Plus power module	LQSE-2ECO-D

LUTRON
2016 OEM ADVANTAGE ACCOUNT

eldoLED DRIVER COMPATIBILITY

Power supply **EA2** **Manufacturer**	**Family/Model #**
Busch-Jaeger	2112U-101
Jung	240-10
Leviton Lighting Controls	IP710-DLX
Lightolier Controls	ZP600FAM120
Merten	5729
Pass & Seymour	CD4FB-W
The Watt Stopper	DCLV1
Synergy	ISD BC
Crestron®	GLX-DIMFLV8
Crestron®	GLXP-DIMFLV8
Crestron®	GLPAC-DIMFLV4-*
Crestron®	GLPAC-DIMFLV8-*
Crestron®	GLPP-DIMFLVEX-PM
Crestron®	GLPP-1DIMFLV2EX-PM
Crestron®	GLPP-1DIMFLV3EX-PM
Crestron®	DIN-AO8
Crestron®	DIN-4DIMFLV4
Crestron®	CLS-EXP-DIMFLV
Crestron®	CLCI-1DIMFLV2EX
Power supply **LA2** **Manufacturer**	**Family/Model #**
Lutron Electronics	Nova T® - NTFTV
Lutron Electronics	Diva® - DVTV
Lutron Electronics	Nova® - NFTV
Lutron Electronics	GrafixEye® GRX-TVI w GRX3503
Lutron Electronics	Energy Savr Node™ - QSN-4T16-S
Lutron Electronics	TVM2 Module
Sensor Switch	nIO EZ
ABB	SD/S 2.16.1

©2022 Lucifer® Lighting Company
As part of its policy of continuous research and product development, the company reserves the right to change or withdraw specifications without prior notice.
[PH] +1-210-227-7329
[FAX] +1-210-227-4967